LOBERON
COMING HOME

10 min

2

| A x2 | B x8 |
| --- | --- |
| 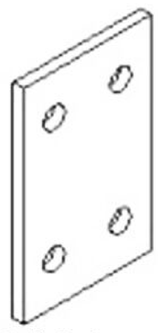 30*60mm | 3.5*29.6mm |

1

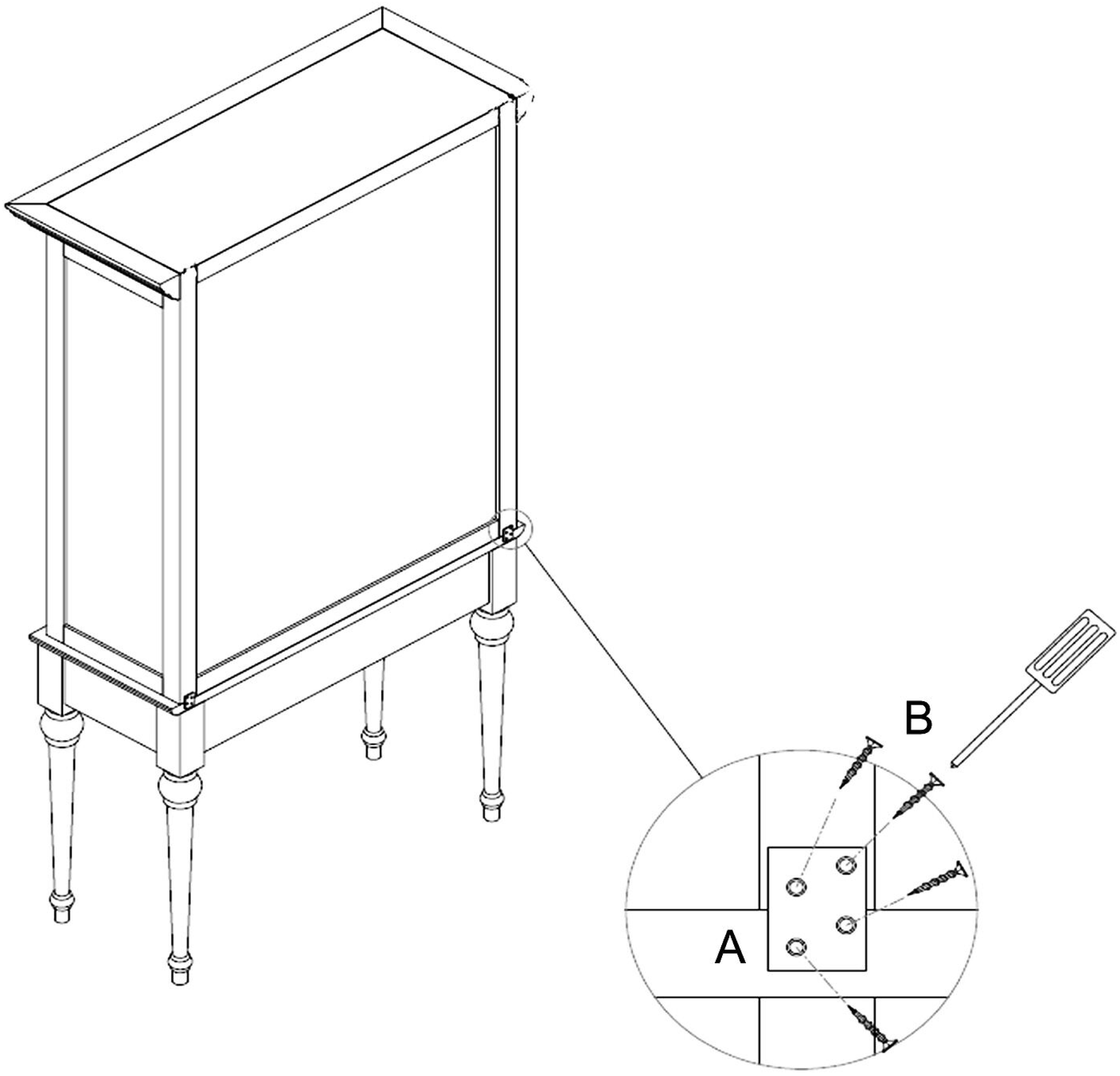

LOBERON
COMING HOME

10 min

2

| A x4 | B x2 | C x4 | D x4 | E x4 |
|---|---|---|---|---|
| | | M4*37mm | M3*18mm | |

1

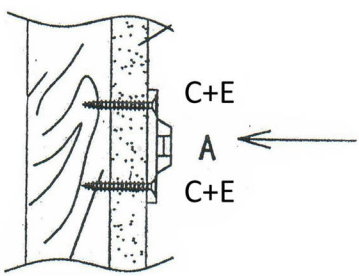


2

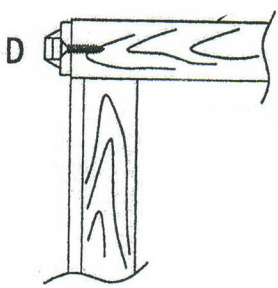

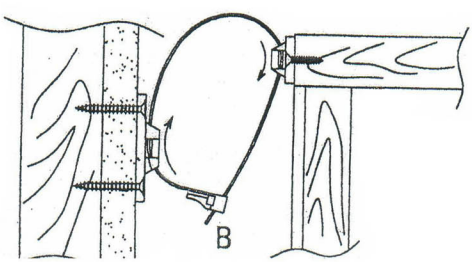
3